Section 23a

X-Band Phased Array Antenna (XPAA) Background and Development for EO-1

. . . Ray Huggins
Boeing

Topics of Discussion

- ***Phased Array Antenna Development at Boeing***
- ***XPAA Development for New Millennium EO-1***
- ***Summary***

Boeing Phased Array Antenna Development Program

- ***Two thrusts aimed at the on-the-move customer***
  - ***Commercial Ku-band (Connexion by Boeing)***
  - ***Government Applications***
    - *X-band (data links, satellite downlinks)*
    - *Ku-band (commercial SATCOM, TDRSS, terrestrial data links)*
    - *Ka-band (commercial and government SATCOM)*
    - *K-band (commercial and government SATCOM)*
    - *Q-band (commercial and government SATCOM)*
- ***Synergy between commercial and government customers provides synergy to reduce costs***

Boeing Phased Array Antenna Attributes

- ***High performance***
  - ***High efficiency***
  - ***Low noise figure***
  - ***Wide scan***
  - ***Wide instantaneous bandwidth***
- ***Low observable***
- ***Site tolerant***
  - ***Low profile***
  - ***Stationary***
  - ***Integral radome***
- ***Space Qualified***
- ***Multiple, agile beams***
  - ***Automatic satellite tracking***
  - ***Automatic linear polarization tracking***
- ***Low maintenance***
  - ***Graceful degradation***
  - ***No moving parts***
  - ***3500 flt hrs.: no failures***
- ***Low cost***
- ***Available now***

Scalable Module Architecture

Hermetic Circular Waveguide Radiator

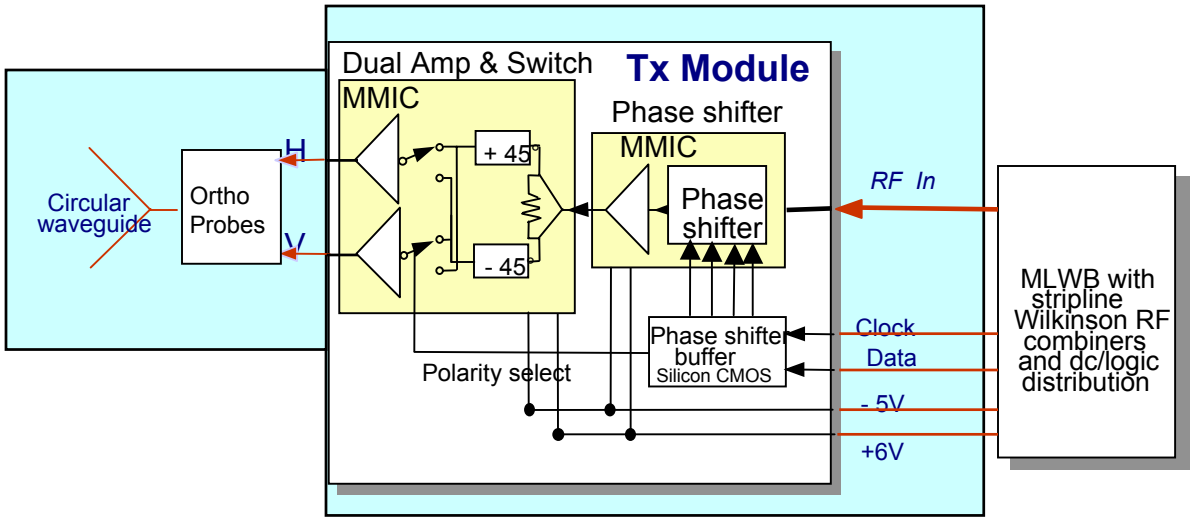

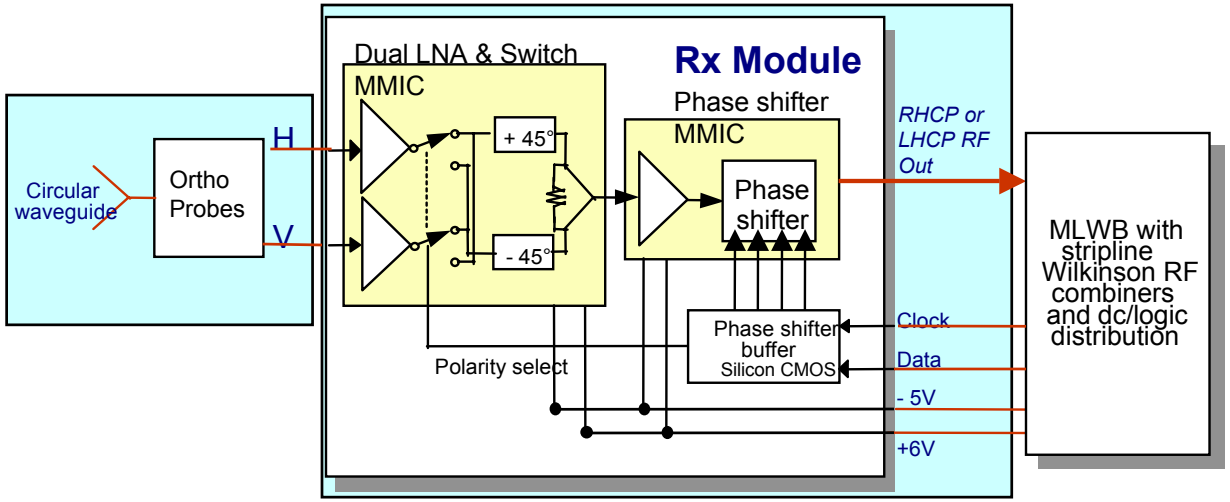

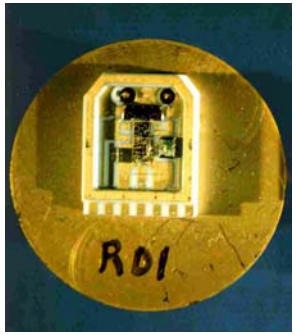

Hermetic MMIC Package

Simple Assembly, High Performance

Mass Produced
Low-cost Module

All-mechanical Interconnect

Integral
Radiating
Aperture:

1500 element modular array

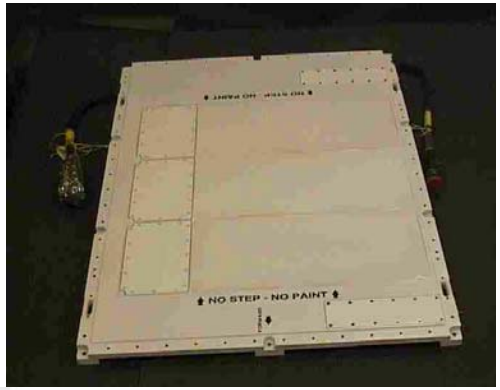

Multilayer,
Multibeam
Interconnect:

Subarray
Combiner
and
Pressure
Plate

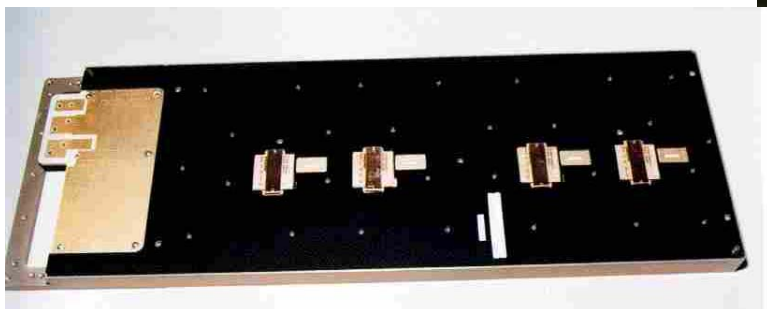

True time
delay module

1500 element, dual beam Ku-band commercial SATCOM phased array antenna

Prototype Hardware Examples

X-Band

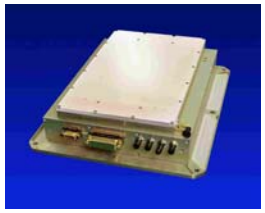

64 elements
transmit
space qualified

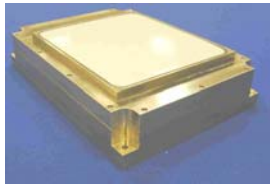

256 elements
transmit
2 independent beams

Ku-Band

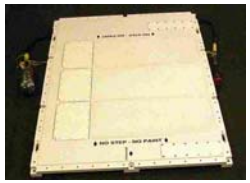

1516 elements
receive
2 independent beams
in production

256 elements
transmit
airborne experiment

Ka-Band

512 elements
receive
airborne flight test
5 Mbps from GBS

512 elements
receive
1000 psi
submarine
application

4096 elements
receive
sea trials in 2001

Q-Band

91 elements
transmit

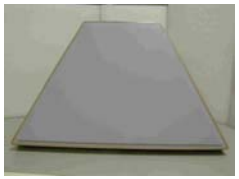

528 elements
transmit
sea trials in 2002

XPAA Characteristics

Weight:	***5 kg***
Envelope:	***25 x 36 x 15 cm***
Prime Power:	***45 W***
EIRP:	***22 dBW***
Frequency:	***8.225 GHz***
Bandwidth:	***400 MHz***
Data Rate:	***105 Mbps***
Scan Angle:	***± 60 deg***
Temperature:	***0 to 40° C***

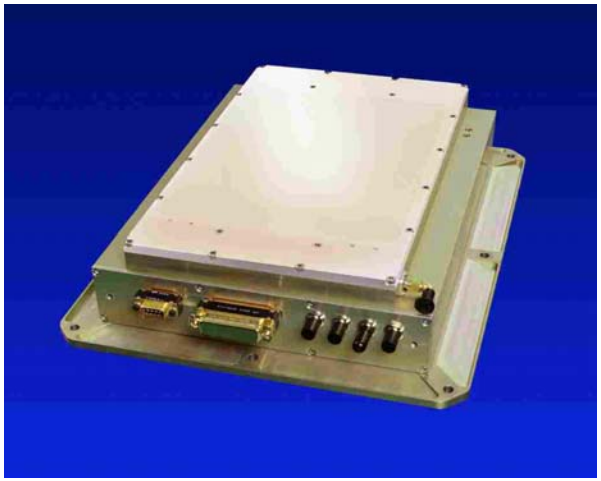

- ***64 elements @ 45 mW/element***
- ***Integral beamsteering controller (Litton RSN)***
- ***Space qualified: radiation, shock, vibration***
- ***Launched November 2000***
- ***Downloading 160Gbit/day***

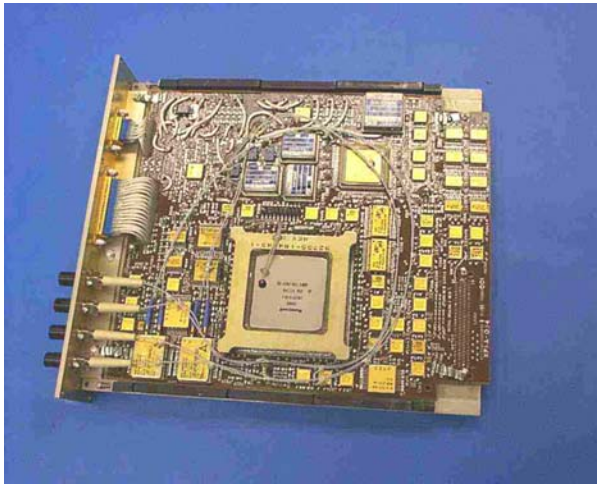

Link Budget Summary

Transmit Power					**Receiver**		
Transmit Wavelength	3.65	cms			Receive antenna gain	57.08	dB
Transmit power per module	45.00	mW	16.5	dBm	Antenna diameter	11.20	meters
Number of modules	64.00				Antenna efficiency	0.50	
Total Transmit power	2.88	Watts	4.59	dBW	Antenna losses	-0.50	dB
Transmit losses	-1.00	dB			Receiver input power	-100.11	dBW
Transmit Antenna Gain	23.33	dB					
Antenna efficiency	0.95			Inches	**Signal to Noise**		
Maximum Scan Angle	60.00	degrees			Thermal noise density	-204.04	dBW/Hz
Transmit Antenna Scan Loss	-3.42	dB			Receive antenna temp.	60.00	deg K
Other losses	-1.25	dB			System noise figure	2.50	dB
Transmit EIRP	22.25	dBW	167.9	W	C/No	103.93	dB-Hz
					Data rate Ro	105.00	Mb/s
Transmission Loss					Received Eb/No	23.72	dB
Free space path loss	-176.76	dB			Bit error probability	1.00E-08	
Satellite altitude	705.00	km			Required Eb/No (QPSK)	12.00	
Elevation angle	16.00	degrees			FEC coding gain	0.00	dB
Transmit range	1,999	km			Implementation loss Lo	-3.00	dB
Atmospheric loss	-0.67	dB			Required margin	3.00	dB
Rain Loss	-1.50	dB					
Total path loss	-178.93	dB			**Power Margin**		
Received isotropic power	-156.68	dBW			Margin	5.72	dB

XPAA Block Diagram

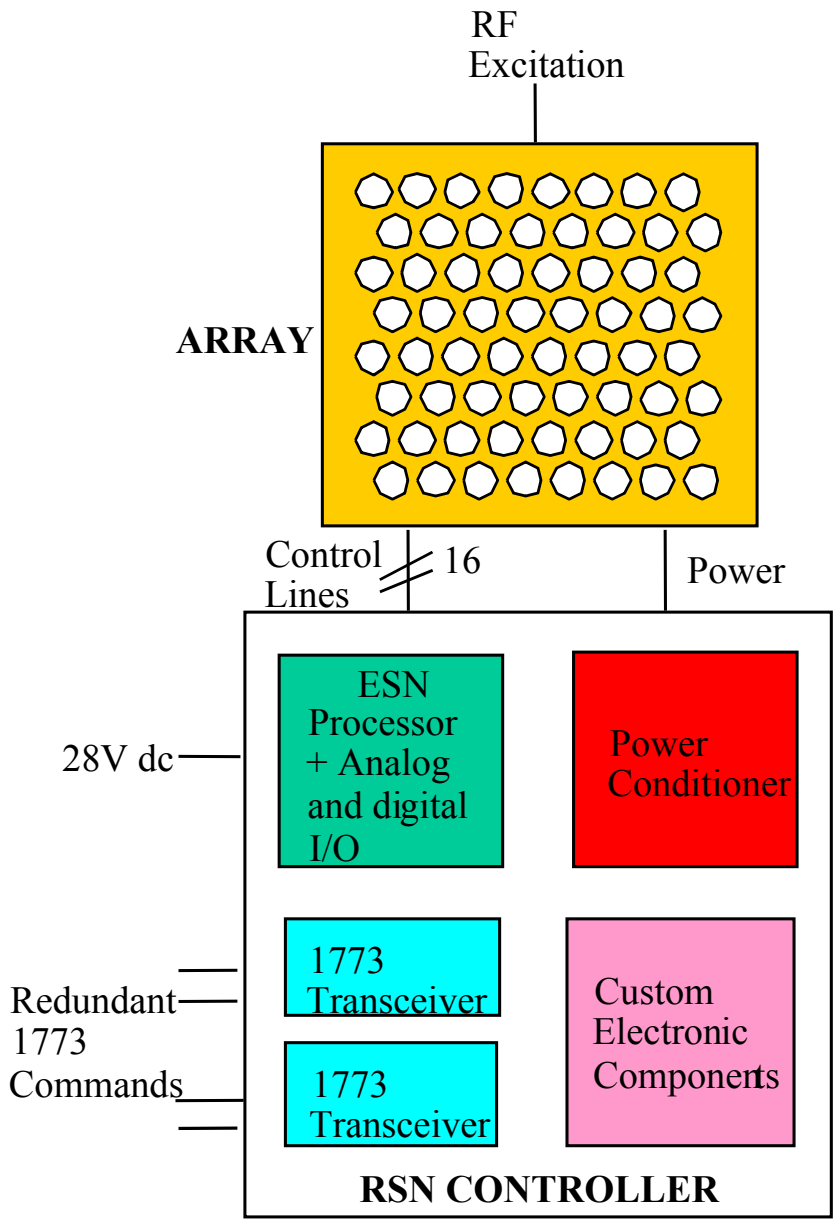

Exploded View of XPAA

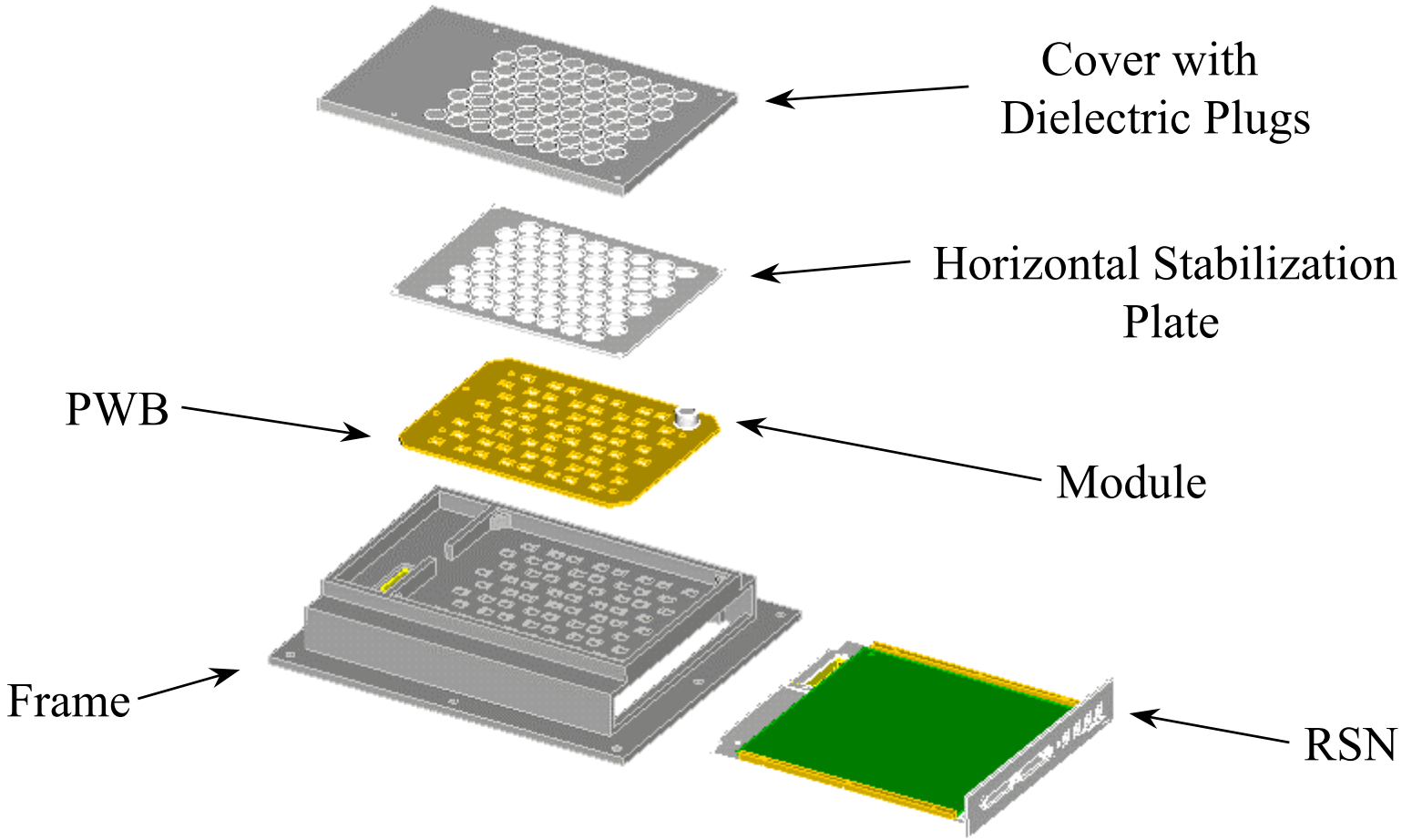

Design Challenges

- ***Thermal - Heat sinking of modules in vacuum assured through use of Cho-Therm gasket***
- ***Shock and Vibration***
  - ***Structure is inherently rigid***
  - ***Stiffener used to minimize module lateral movement***
- ***Radiation***
  - ***Single event latchups***
    - *Employs current limiting resistor in module*
    - *ASIC resets upon next power up*
  - ***Total ionizing dose***
    - *Failure TID approximately 3 kRad (via experiment)*
    - *Anticipated TID < 0.5 kRad*

XPAA Measured Radiation Patterns

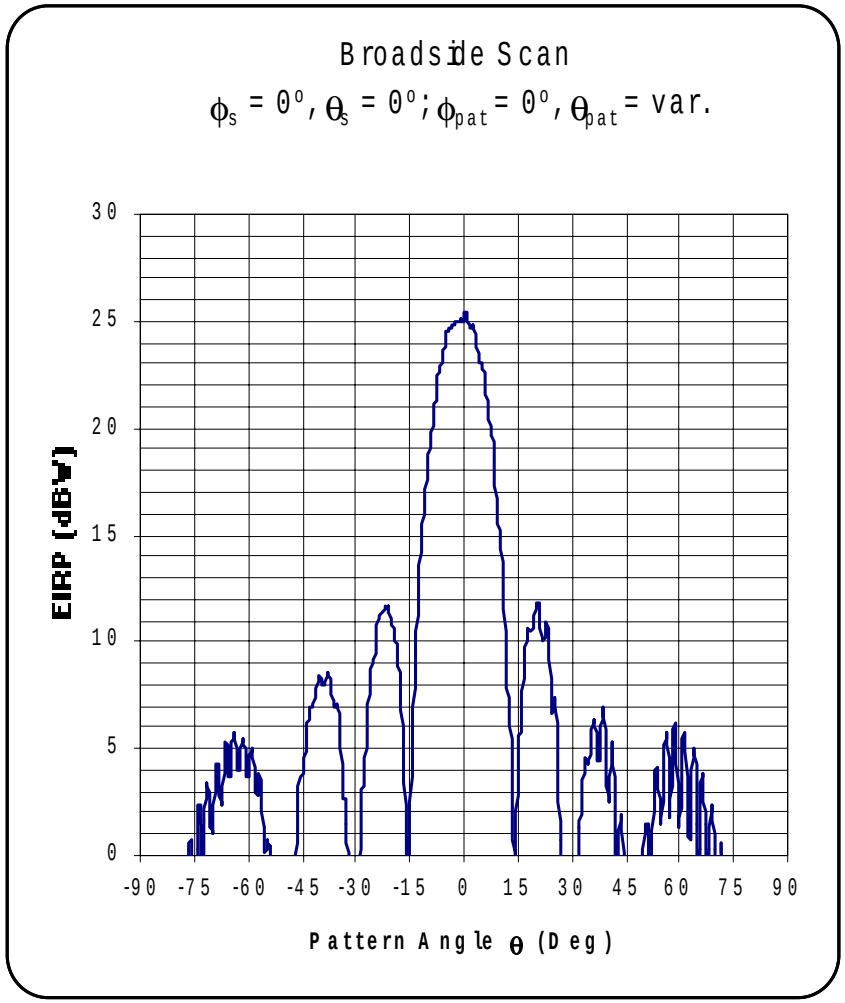

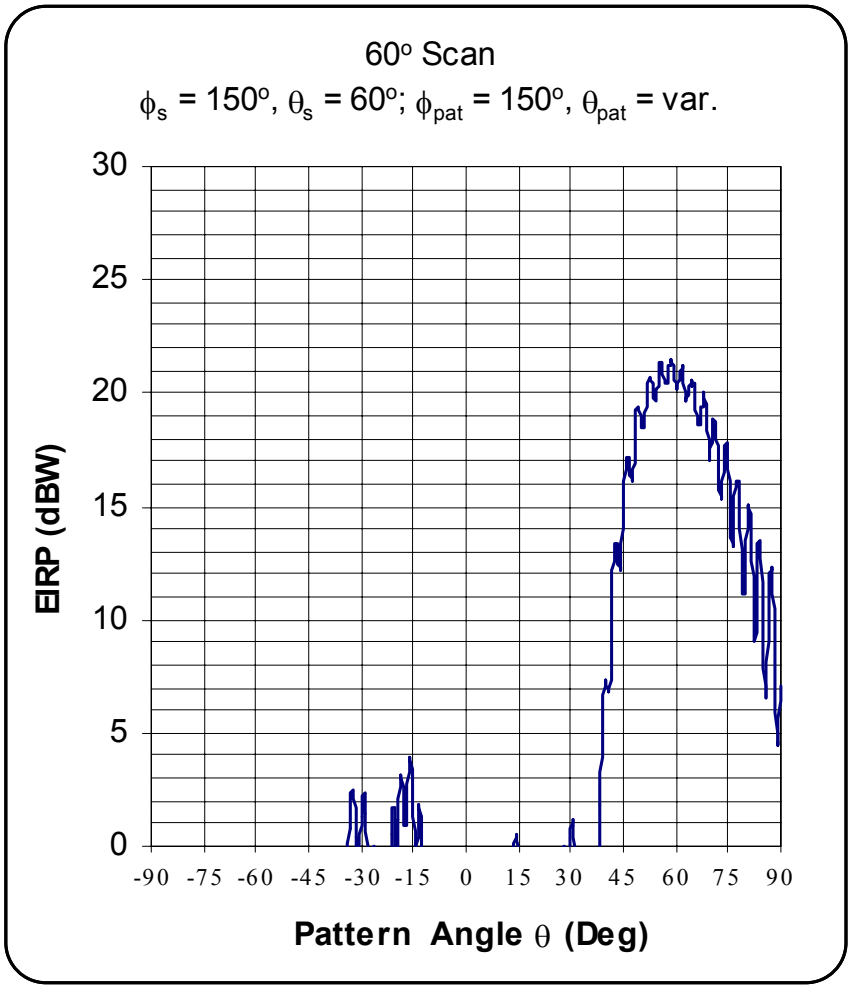

Summary

- ***Boeing offers extensive line of phased array antennas for SATCOM on-the-move***
- ***XPAA development based upon COTS Ku-band phased array antenna technology***
- ***Only minor design changes needed to transition Boeing COTS phased array antenna technology to space environment***
- ***XPAA has performed flawlessly on the ground and in space since delivery in 1999***