Overview*

D.E. Lencioni

ALI Technology Transfer Forum

17 October 2001

*This work was sponsored by NASA/Goddard Space Flight Center under U.S. Air Force Contract number F19628-00-C-0002. Opinions, interpretations, conclusions, and recommendations are those of the authors and are not necessarily endorsed by the United States Government.

ALI Technology Transfer Forum Overview

- Introduction
- ALI Design and Performance Overview
- Application to future instruments
- Summary

Introduction

- Third of four NASA EO-1 Technology Forums
  - Technology Transfer and Infusion Workshop, January 2001
  - Mission Technology Forum, August 2001
  - ALI Technology Transfer Forum, October 2001
  - Science Validation Forum, Summer 2002
- Purpose is to facilitate transfer of EO-1 technologies into new applications and future missions such as LDCM
- The focus of this forum is the Advanced Land Imager
  - Design, development, integration, and test
  - Characterization and calibration
  - In-flight performance validation
  - ALI technology transfer

Earth Observing-1 (EO-1) Mission Overview

- NASA's New Millennium Program (NMP)
- Technology Validation Mission
- Launched 21 November 2000 on a Delta-7320 from Vandenberg AFB
- Sun-synchronous, circular, 705 km orbit with a 10:01 am descending node
- In formation with Landsat-7 for direct comparison of common data sets

EO-1 Advanced Land Imager

- Primary instrument on EO-1
- Validating new technologies
  - Landsat data continuity, improved performance, and cost reduction
  - Innovative approaches to land imaging
- Designed, developed, and tested by MIT Lincoln Laboratory with NMP instrument team members
  - Raytheon SBRS for the focal plane system
  - SSGPO, Inc. for the optical system
- Measurement requirements were developed
  - From the bottom up by the instrument team
  - In collaboration with the earth science community

Key ALI Performance Requirements

- Meet or exceed ETM+ performance (w/o thermal band) at minimum size, weight, schedule, and cost
- Spectral band suite was augmented for science reasons
  - Split band # 4 into two sub-bands
  - Add bands at 442 nm and 1244 nm
  - Reduce spectral width on the Pan band
- Pan band GSD reduced to 10m
- Dynamic range to cover >100% albedo with one gain state
- SNR four to ten times ETM+ values, depending on band
- Demonstrate spatial, spectral, and radiometric calibration for large detector arrays
- Other performance goals guided by Landsat-7

Advanced Land Imager (ALI)

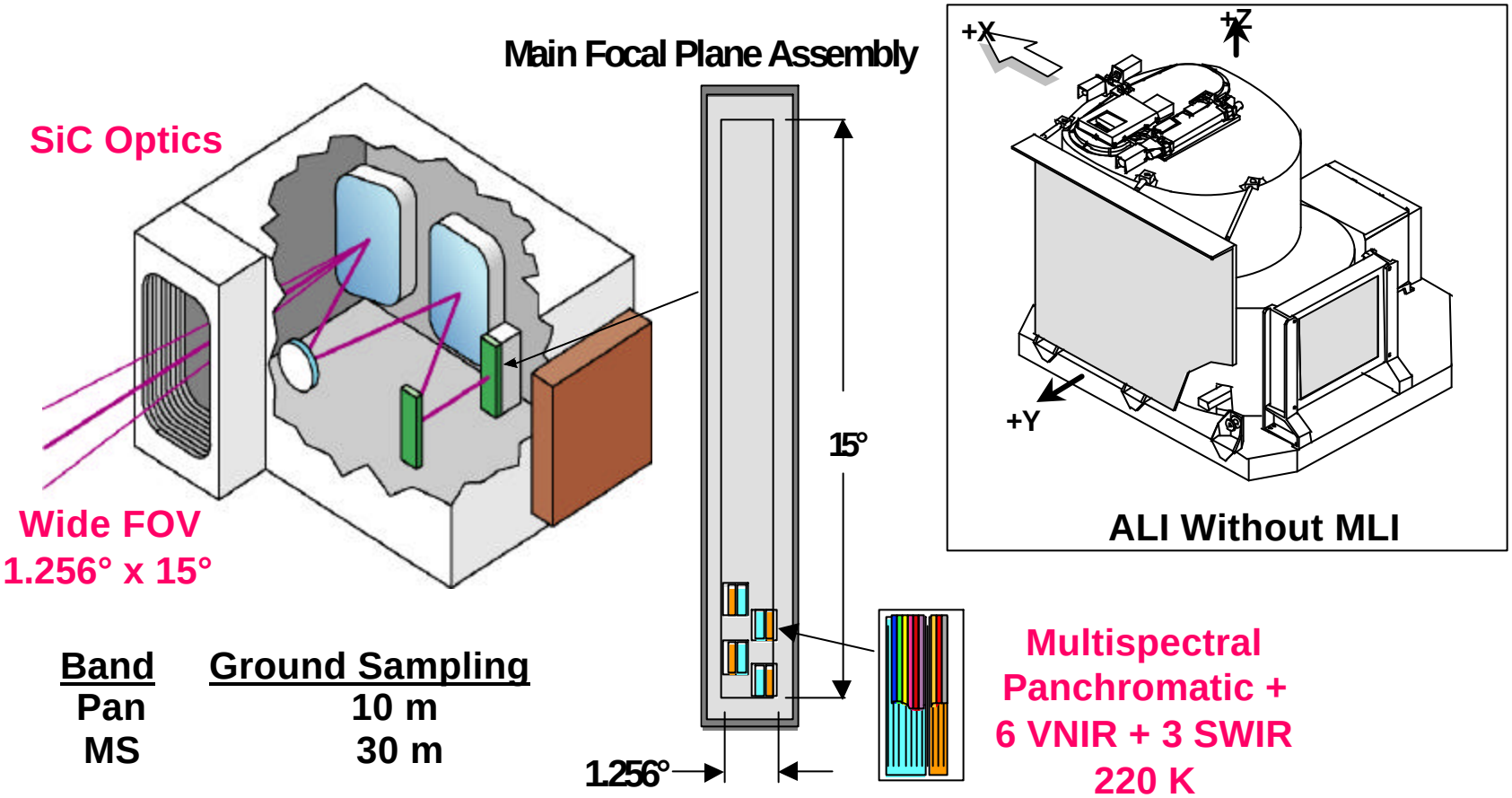

Band	Ground Sampling
Pan	10 m
MS	30 m

Main Focal Plane Assembly

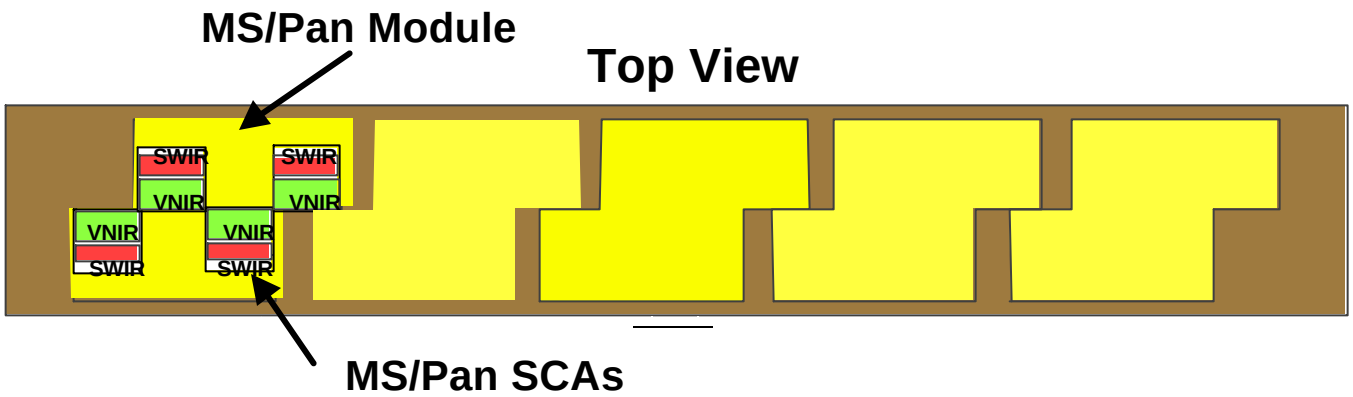

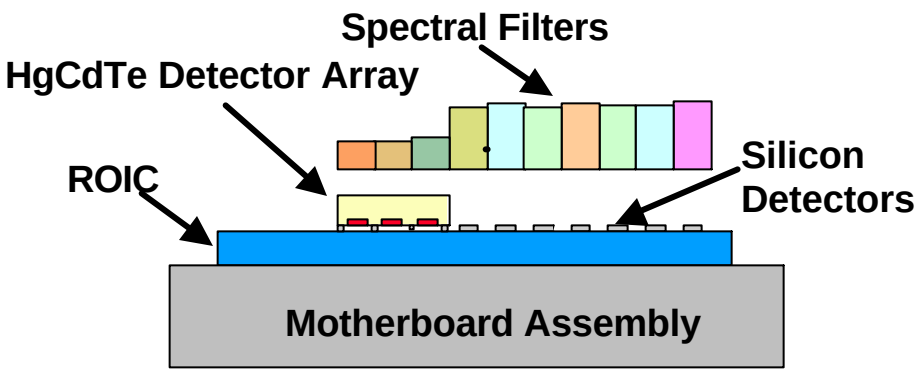

MS/Pan SCA

MS : Multispectral
Pan : Panchromatic
ROIC : Read-out Integrated Circuit
SCA : Sensor Chip Assembly
SWIR : Short Wave Infrared
VNIR : Visible Near Infrared

ALI Spectral Response Functions

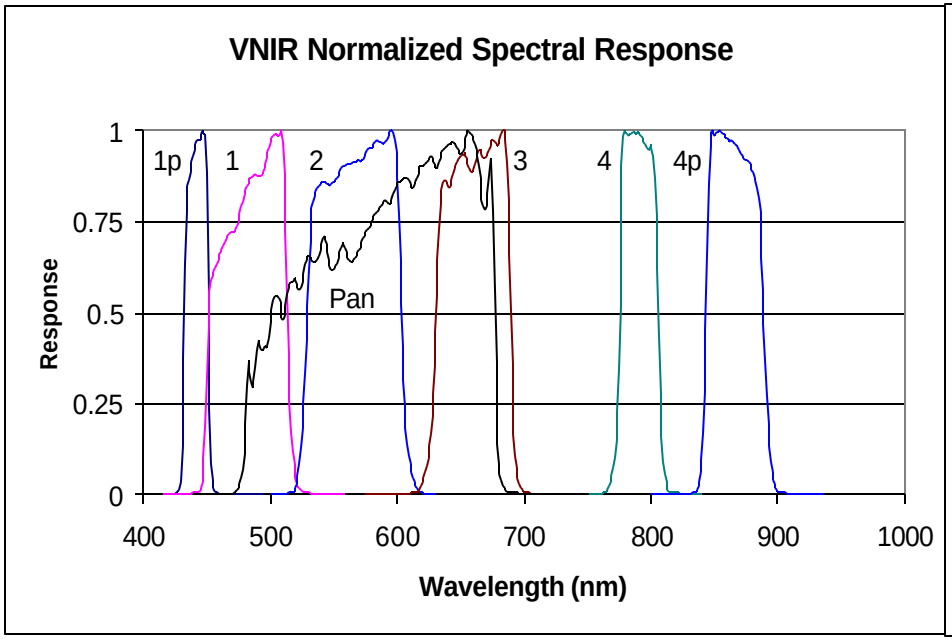

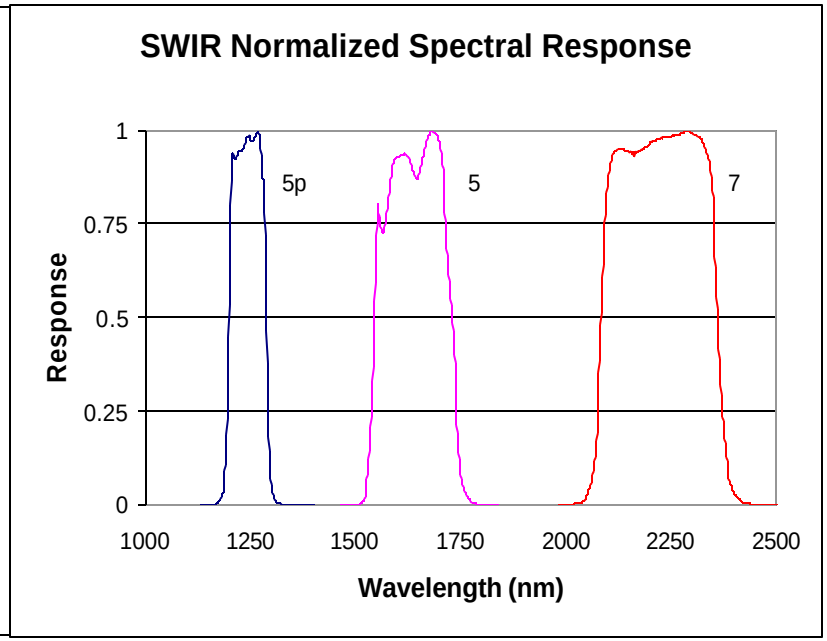

ALI Bands	1p	1	2	PAN	3	4	4p	5p	5	7
Wavelength (nm)	442	485	567	592	660	790	866	1244	1640	2226
Bandwidth (nm)	19	53	70	144	56	31	44	88	171	272

MS/PAN Flight Module

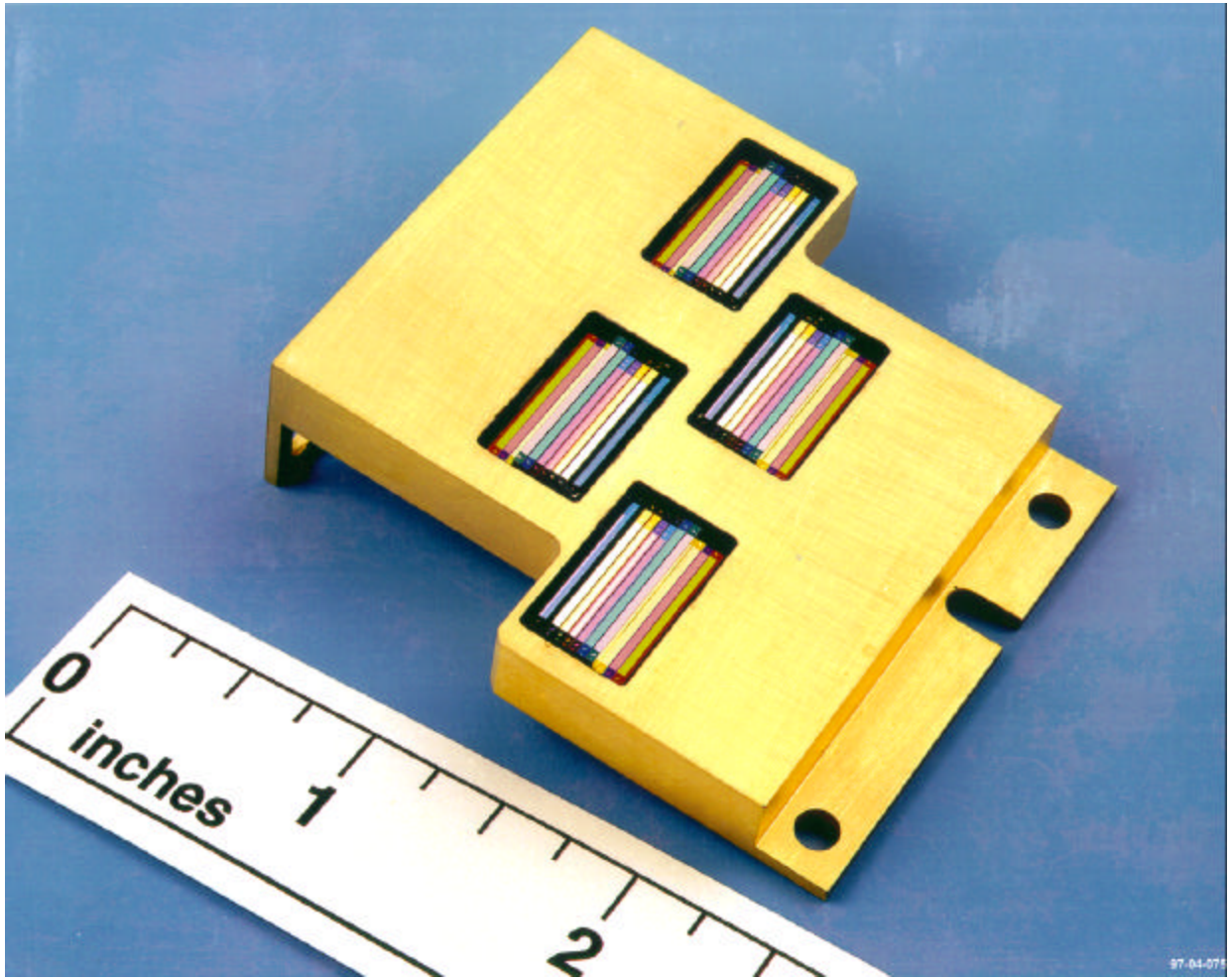

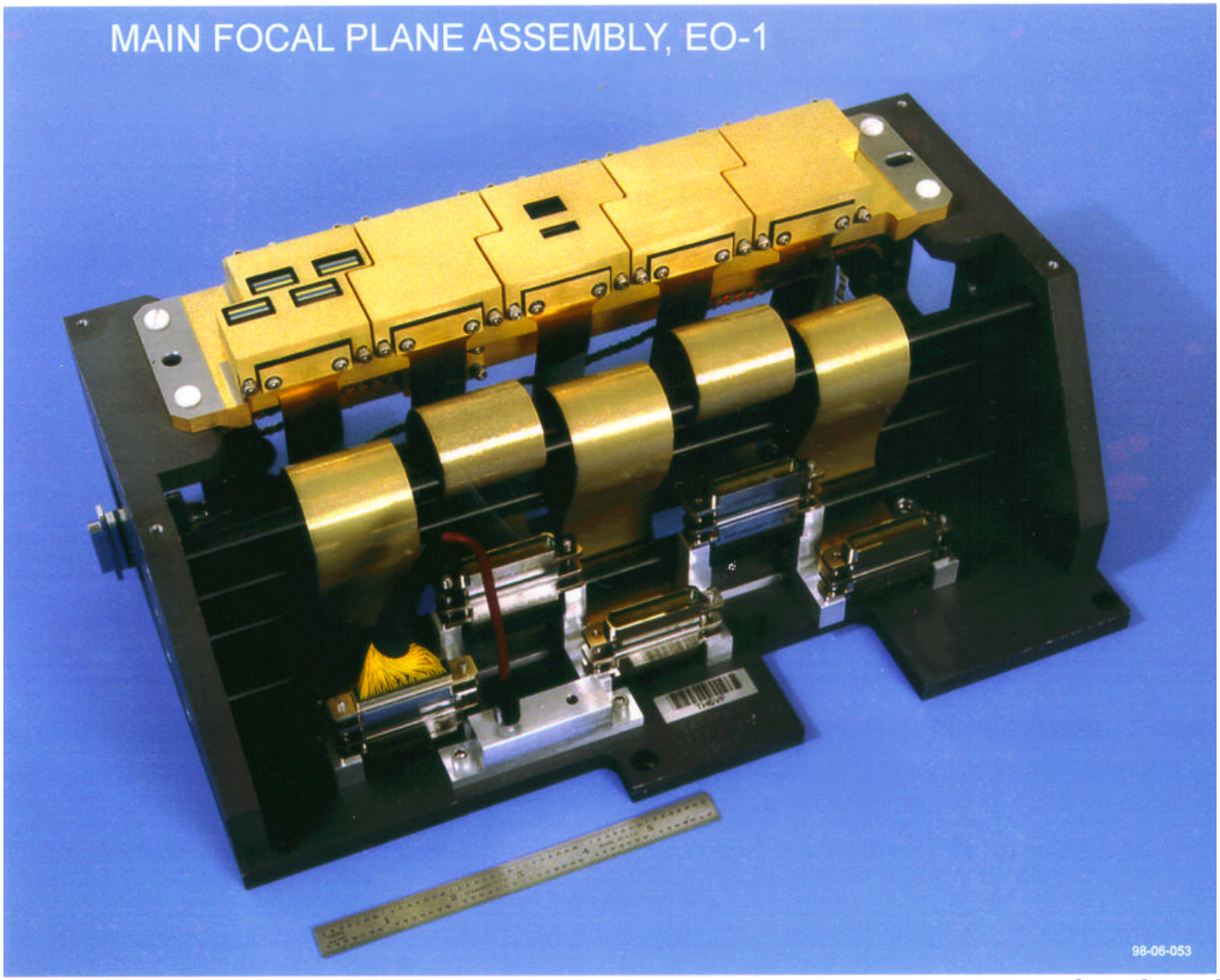
MAIN FOCAL PLANE ASSEMBLY, EO-1
98-06-053

Partially Assembled Flight ALI

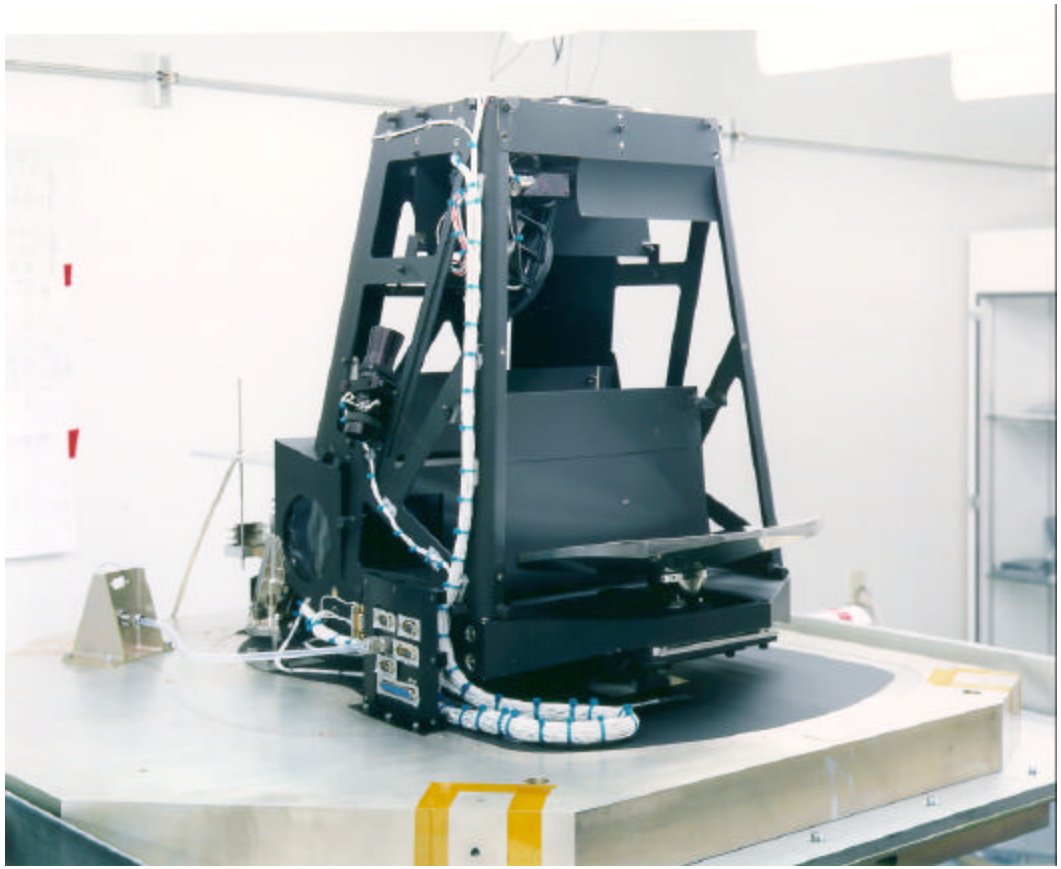

Telescope Features

- 12.5 cm entrance pupil
- 15° x 1.26° field-of-view
- Telecentric, f/7.5 design
- Unobscured, reflective optics
- Silicon carbide mirrors
- Wavefront error:

  = 0.11 l RMS @ 633 nm

Solar Calibration

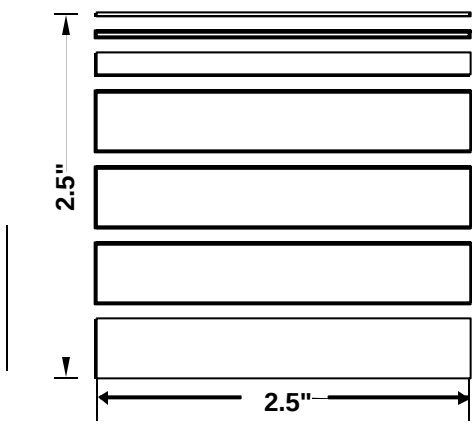

Signal Level	Cumulative Signal
1%	1%
2%	3%
7%	10%
20%	30%
20%	50%
20%	70%
20%	90%

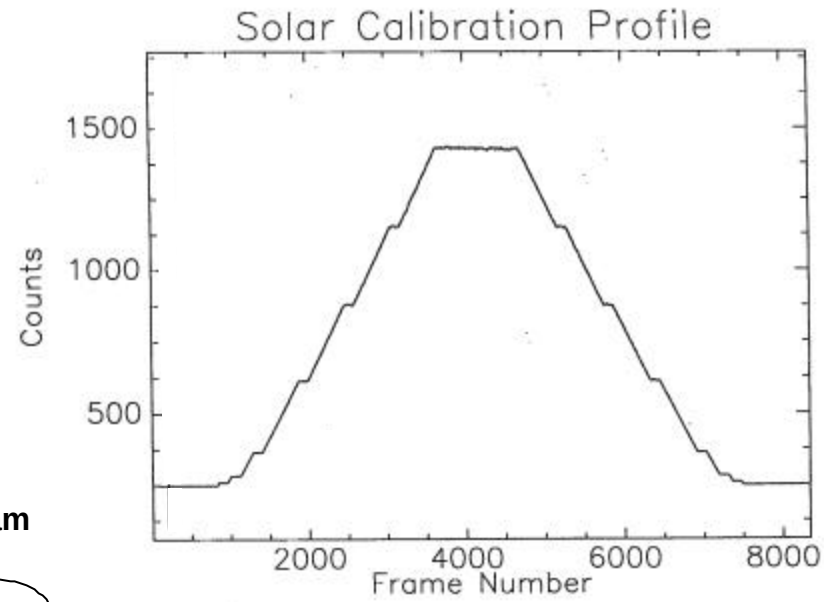

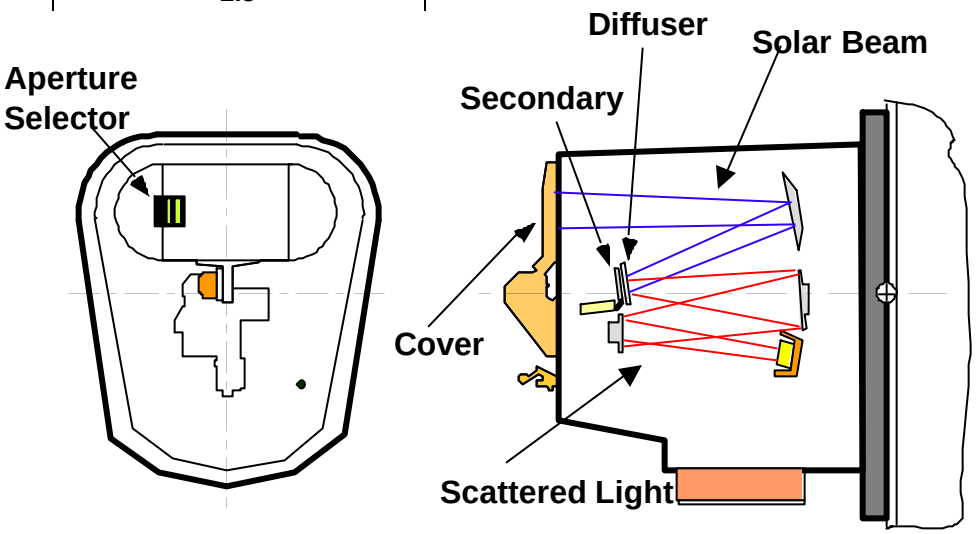

ALI Flight Instrument

Installation of ALI into Thermal Vacuum Chamber

EO-1 Launch Photos

EO-1 Mounted for Launch

EO-1 Launch: 21 November, 2000

“First Light” Image of Alaska

Oahu, HI

ALI SNR Performance

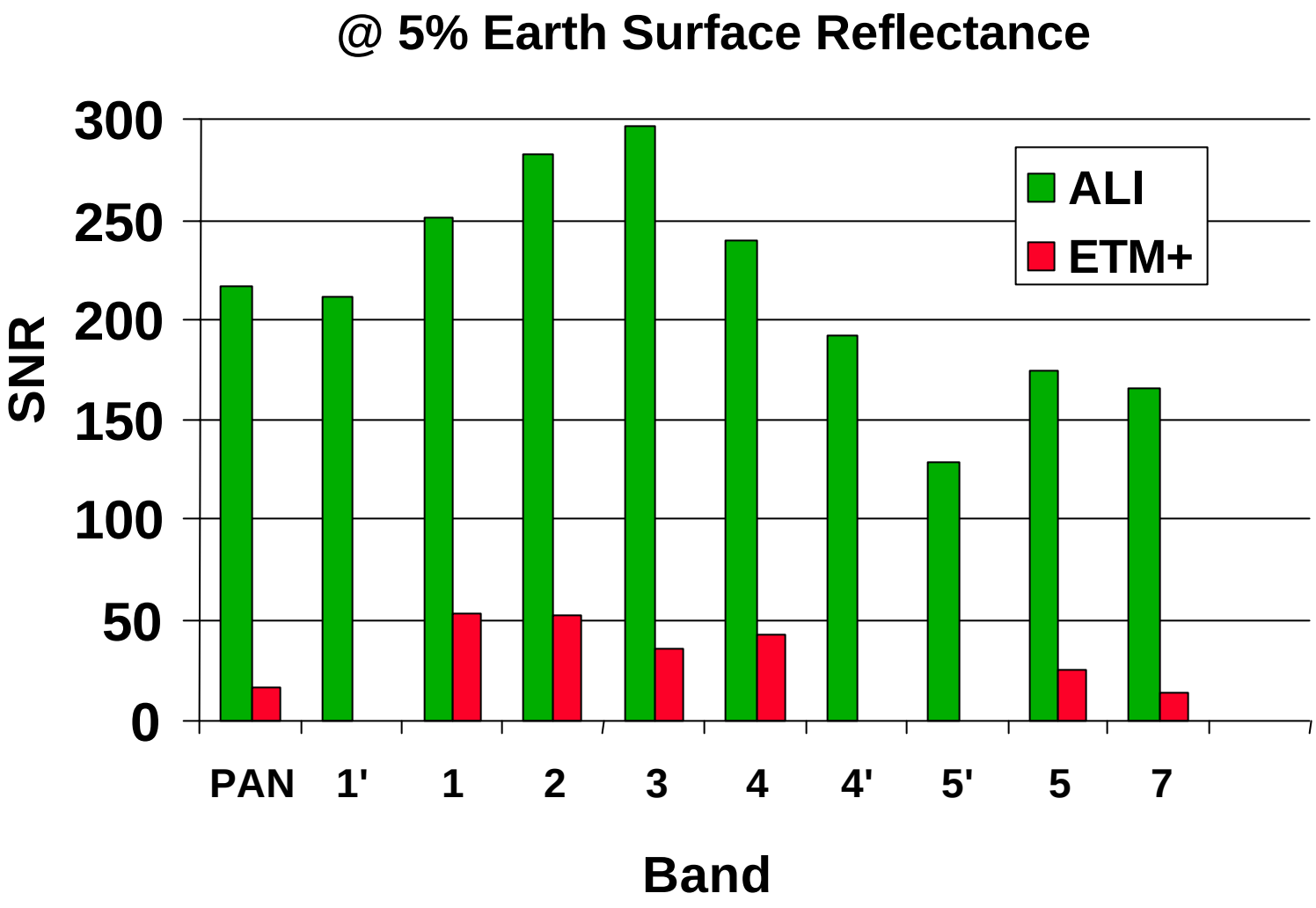

Growth Path to Advanced Instrument

Populate focal plane with 5 MS/PAN modules

- Full 185 km wide field-of-view
- Main Focal Plane bench designed for 5 modules

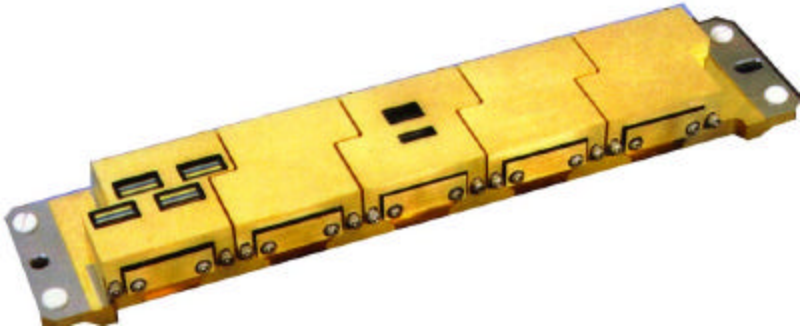

Changes required to accommodate full MS/PAN coverage

Resource	*ALI*	*Advanced Landsat*
Data Ports	1	5
Data Rate	102.4 Mb/s	512 Mb/s
FPE Power	~ 15 Watts	~ 50 Watts
FPA Size	30.7 x 6.6 x 5.2 cm	30.7 x 6.6 x 5.2 cm

Land Imaging Instrument Comparison

ALI - Concept for Future Landsat Instrument

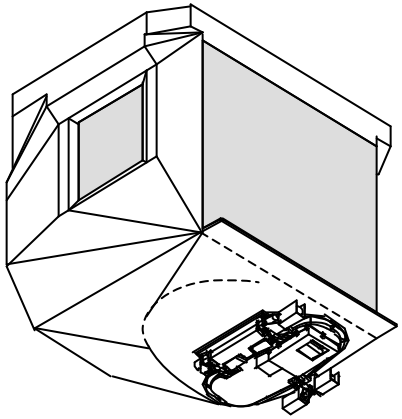

Enhanced Thematic Mapper (ETM+)

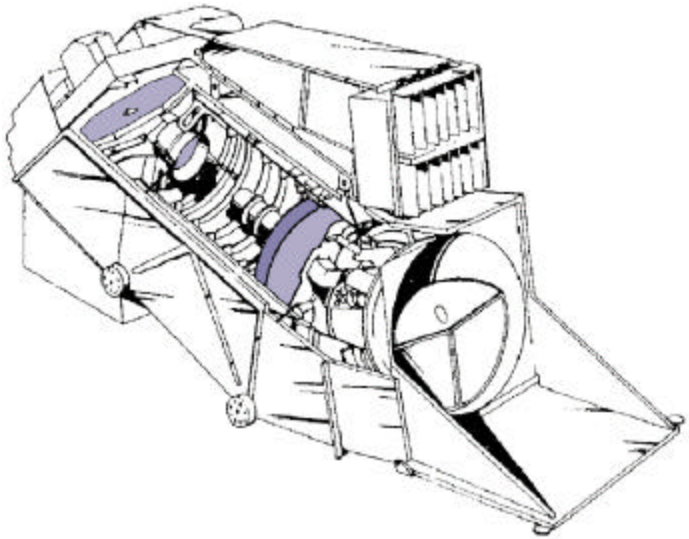

100	Mass (kg)	425
100	Power (W)	545
70 × 75 × 75	Size (cm)	196 × 114 × 66
7, 3, 0	VNIR, SWIR, LWIR Bands	5, 2, 1
10, 30	Pan, MS Resolution (m)	15, 30
4-10	Relative SNR	1

Summary

- ALI is the primary instrument on the EO-1 mission of NASA's New Millennium Program
- The mission is now in progress and is successfully validating ALI technologies
- Key performance specifications have been met
- ALI provides path for low cost, high performance, remote sensing instruments
- MIT Lincoln Laboratory is interested in working with NASA to transfer the ALI technology